FRONT & REAR AXLE

SECTION AX

CONTENTS

FRONT AXLE 2
Precautions 2
PRECAUTIONS 2
Preparation 2
SPECIAL SERVICE TOOLS 2
COMMERCIAL SERVICE TOOLS 2
Noise, Vibration and Harshness (NVH) Troubleshooting 3
NVH TROUBLESHOOTING CHART 3
On-vehicle Service 3
FRONT AXLE PARTS 3
FRONT WHEEL BEARING 3
DRIVE SHAFT 4
Wheel Hub and Knuckle 5
COMPONENTS 5
REMOVAL 5
INSTALLATION 7
DISASSEMBLY 7
INSPECTION 8
ASSEMBLY 8
Drive Shaft 10
COMPONENTS 10
REMOVAL 11
INSTALLATION 11
DISASSEMBLY 12
INSPECTION 14
ASSEMBLY 14
Service Data and Specifications (SDS) 19
DRIVE SHAFT 19
DYNAMIC DAMPER (WHERE FITTED) 20
WHEEL BEARING (FRONT) 20
REAR AXLE 21
Precautions 21
PRECAUTIONS 21
Preparation 21
SPECIAL SERVICE TOOLS 21
COMMERCIAL SERVICE TOOLS 21
Noise, Vibration and Harshness (NVH) Troubleshooting 22
On-vehicle Service 22
REAR AXLE PARTS 22
REAR WHEEL BEARING 22
Wheel Hub 23
COMPONENTS 23
REMOVAL 23
INSTALLATION 24
Service Data and Specifications (SDS) 26
WHEEL BEARING (REAR) 26

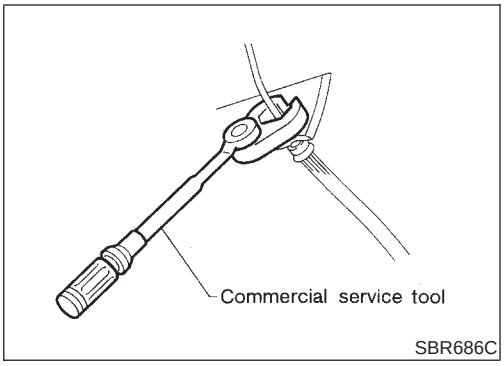

Precautions

PRECAUTIONS

NLAX0001

- **When installing rubber parts, final tightening must be carried out under unladen condition* with tires on ground.**
  ***: Fuel, radiator coolant and engine oil full. Spare tire, jack, hand tools and mats in designated positions.**
- **After installing removed suspension parts, check wheel alignment and adjust if necessary.**
- **Use flare nut wrench when removing or installing brake tubes.**
- **Always torque brake lines when installing.**

Preparation

SPECIAL SERVICE TOOLS

NLAX0002

Tool number Tool name	Description	
HT72520000 Ball joint remover	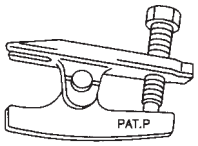 NT146	Removing tie-rod outer end and lower ball joint
KV38106800 Differential side oil seal protector	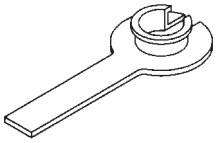 NT147	Installing drive shaft
KV40107300 Boot band tool	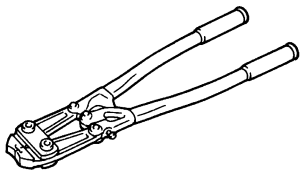 ZZA1229D	Installing boot bands

COMMERCIAL SERVICE TOOLS

NLAX0003

Tool name	Description	
1 Flare nut crowfoot 2 Torque wrench	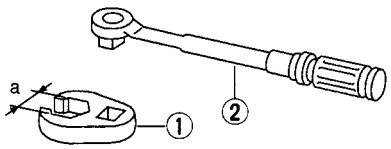 NT360	Removing and installing each brake piping **a: 10 mm (0.39 in)**

Noise, Vibration and Harshness (NVH) Troubleshooting

=NLAX0004

NVH TROUBLESHOOTING CHART

NLAX0004S01

Use the chart below to help you find the cause of the symptom. If necessary, repair or replace these parts.

Possible cause and SUSPECTED PARTS			Excessive joint angle	Joint sliding resistance	Imbalance	Improper installation, looseness	Parts interference	Wheel bearing damage	DRIVE SHAFT	AXLE	SUSPENSION	TIRES	ROAD WHEEL	BRAKES	STEERING
Reference page			—	AX-14	—	AX-5, 23	—	AX-3, 22	—	—	SU-4	SU-4	SU-4	BR-9	ST-5
Symptom	DRIVE SHAFT	Noise, Vibration	×	×						×	×	×	×	×	×
		Shake	×		×					×	×	×	×	×	×
	AXLE	Noise				×	×		×		×	×	×	×	×
		Shake				×	×		×		×	×	×	×	×
		Vibration				×	×		×		×	×			×
		Shimmy				×	×				×	×	×	×	×
		Judder				×					×	×	×	×	×
		Poor quality ride or handling				×	×	×			×	×	×		

×: Applicable

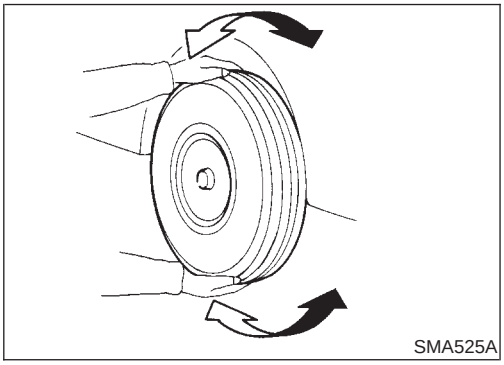
SMA525A

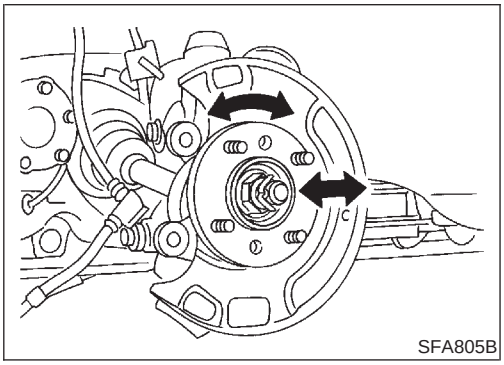
SFA805B

On-vehicle Service

FRONT AXLE PARTS

NLAX0005

Check front axle and front suspension parts for excessive play, cracks, wear or other damage.

- Shake each front wheel to check for excessive play.
- Make sure that cotter pin is inserted.
- Retighten all axle and suspension nuts and bolts to the specified torque.

Tightening torque:
Refer to SU-4, “FRONT SUSPENSION”.

FRONT WHEEL BEARING

NLAX0006

- Check that wheel bearings operate smoothly.
- Check axial end play.

Axial end play:
0.05 mm (0.0020 in)

If out of specification or wheel bearing does not turn smoothly, replace wheel bearing assembly.
Refer to “Wheel Hub and Knuckle”, “FRONT AXLE”, AX-5.

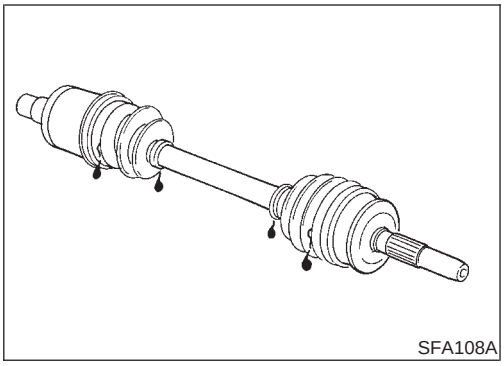

DRIVE SHAFT

NLAX0007

Check for grease leakage or other damage.

Wheel Hub and Knuckle

COMPONENTS

=NLAX0008

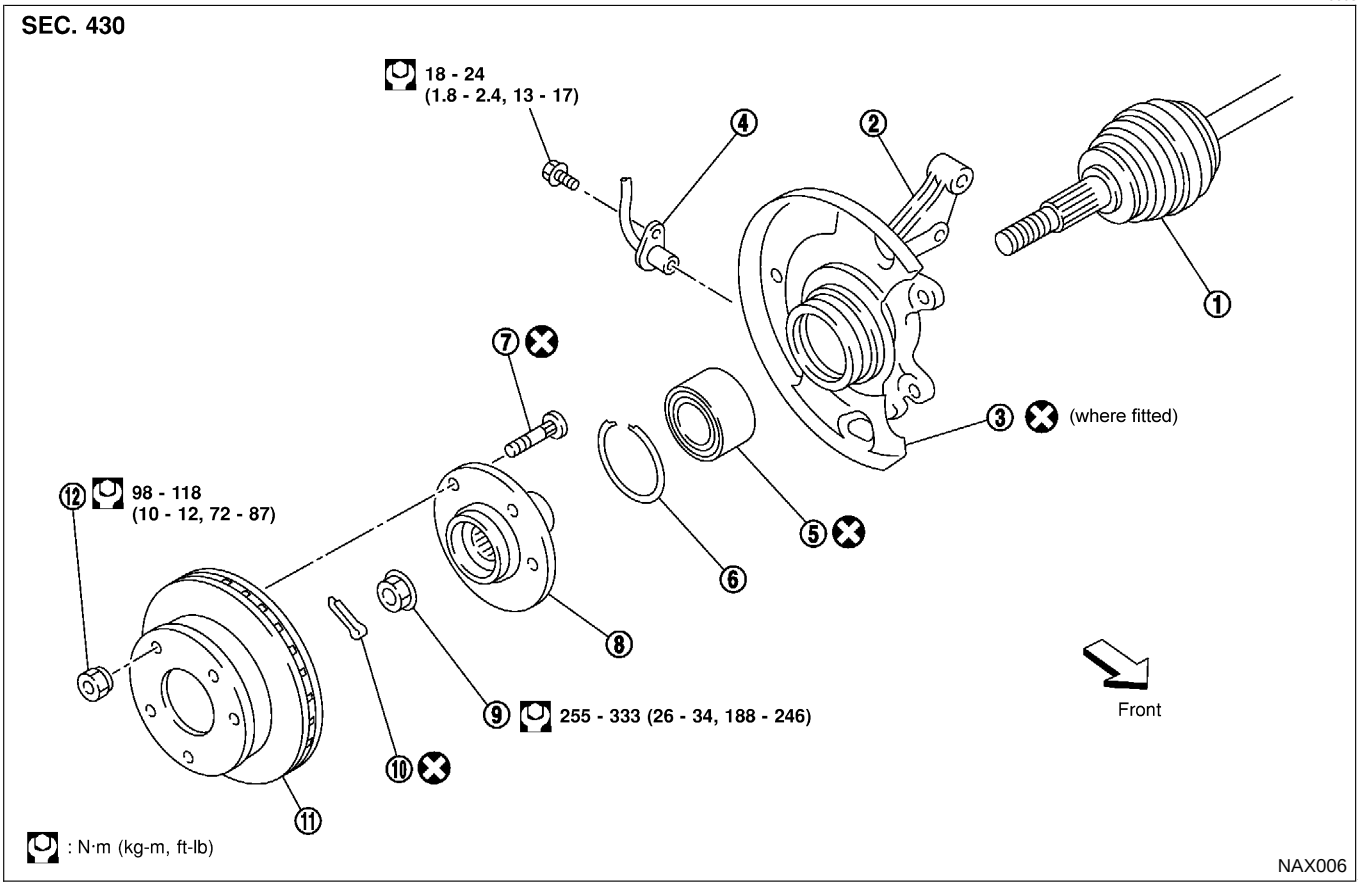

1. Drive shaft
2. Knuckle
3. Baffle plate (where fitted)
4. ABS sensor
5. Wheel bearing assembly
6. Snap ring
7. Hub bolt
8. Wheel hub
9. Wheel bearing lock nut
10. Cotter pin
11. Brake disc
12. Wheel nut

REMOVAL

NLAX0009

CAUTION:

Before removing the front axle assembly, disconnect the ABS wheel sensor from the assembly. Then move it away from the front axle assembly area.
Failure to do so may result in damage to the sensor wires and the sensor becoming inoperative.

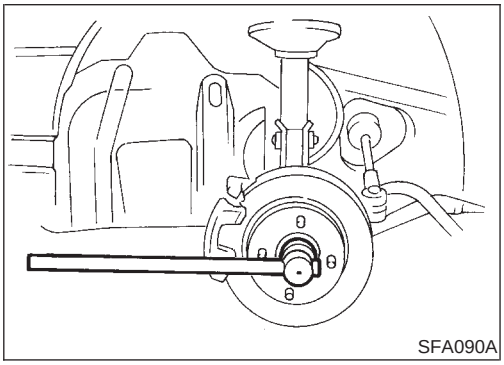

1. Remove wheel bearing lock nut.

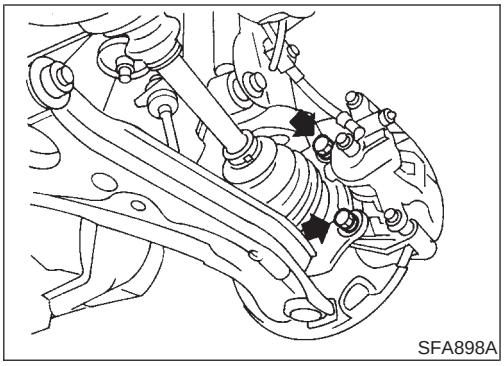
SFA898A

2. Remove brake caliper assembly and rotor.

Brake hose need not be disconnected from brake caliper. In this case, suspend caliper assembly with wire so as not to stretch brake hose. Be careful not to depress brake pedal, or piston will pop out.
Make sure brake hose is not twisted.

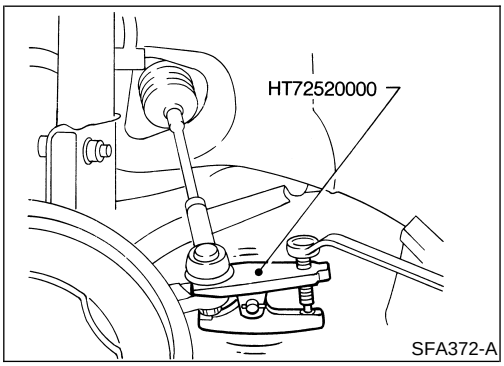

SFA372-A

3. Separate tie-rod from knuckle with Tool.

Install stud nut on stud bolt to prevent damage to stud bolt.

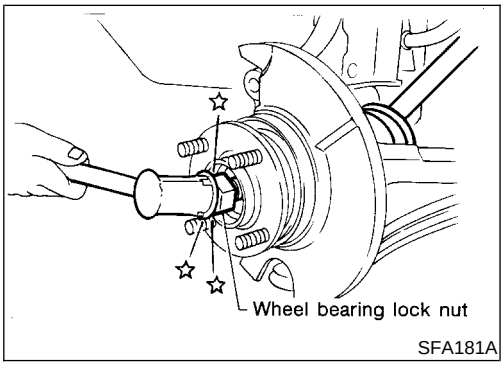

SFA181A

4. Separate drive shaft from knuckle by lightly tapping it. If it is hard to remove, use a puller.

Cover boots with shop towel so as not to damage them when removing drive shaft.

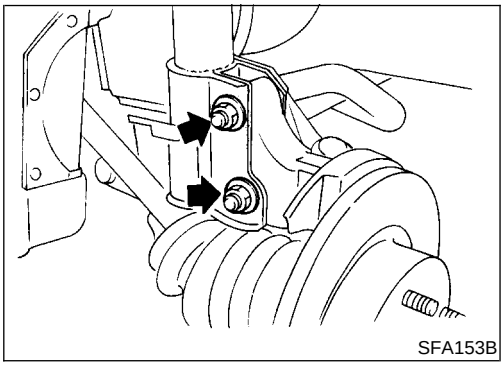
SFA153B

5. Remove strut lower mounting bolts.

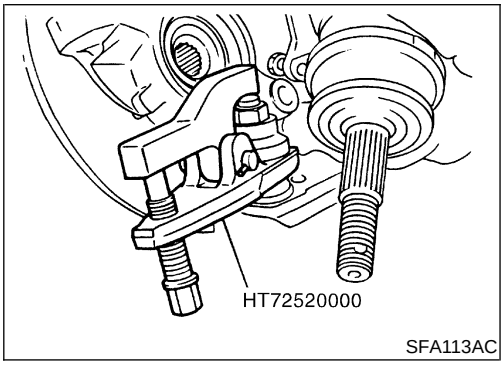

SFA113AC

6. Loosen lower ball joint tightening nut.
7. Separate knuckle from lower ball joint stud with Tool.
8. Remove knuckle from transverse link.

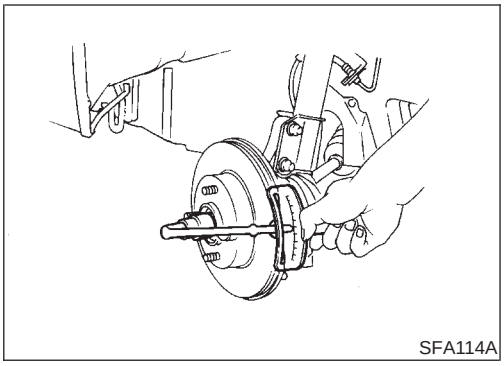

SFA114A

INSTALLATION

NLAX0010

1. Install knuckle with wheel hub.

When installing knuckle to strut, be sure to hold bolts and tighten nuts.

: 140 - 160 N·m (14 - 16 kg-m, 103 - 118 ft-lb)

Before tightening, apply oil to threaded portion of drive shaft.

2. Tighten wheel bearing lock nut.

: 255 - 333 N·m (26 - 34 kg-m, 188 - 246 ft-lb)

3. Make sure that wheel bearings operate smoothly.

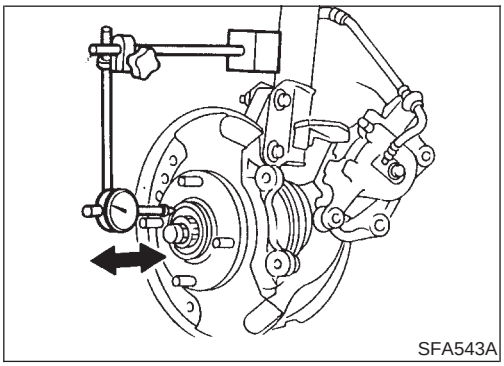

SFA543A

4. Check wheel bearing axial end play.

Axial end play:
0.05 mm (0.0020 in)

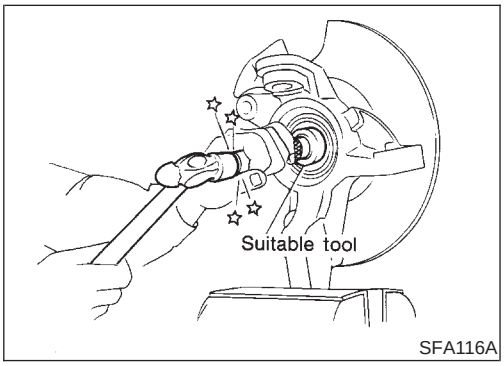

SFA116A

DISASSEMBLY

NLAX0011

CAUTION:

When removing wheel hub or wheel bearing from knuckle, replace wheel bearing assembly (outer race and inner races) with a new one.

Wheel Hub

NLAX0011S01

Drive out hub with inner race (outside) from knuckle with a suitable tool.

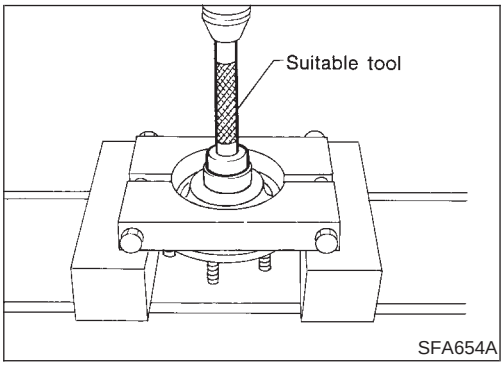

SFA654A

Wheel Bearing

NLAX0011S02

When replacing wheel bearing, replace complete wheel bearing assembly (Inner races and outer race).

1. Remove bearing inner race (outside).

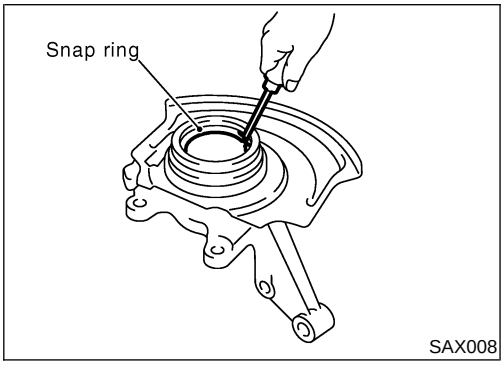

SAX008

2. Remove snap rings.

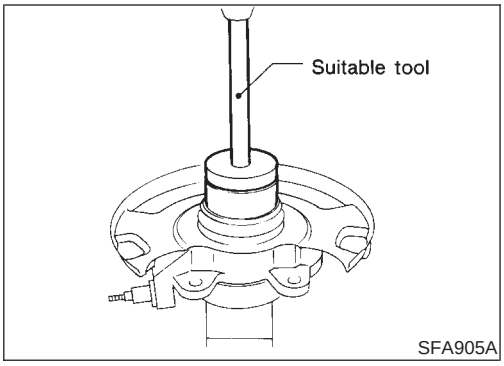

3. Press out bearing outer race.

INSPECTION

NLAX0012

Wheel Hub and Knuckle

NLAX0012S01

Check wheel hub and knuckle for cracks by using a magnetic exploration or dyeing test.

Snap Ring

NLAX0012S02

Check snap ring for wear or cracks. Replace if necessary.

ASSEMBLY

NLAX0013

- When removing baffle plate, replace it with a new one.
- When installing the baffle plate, press new plate so that it is in contact with knuckle wall. Refer to figure at left.

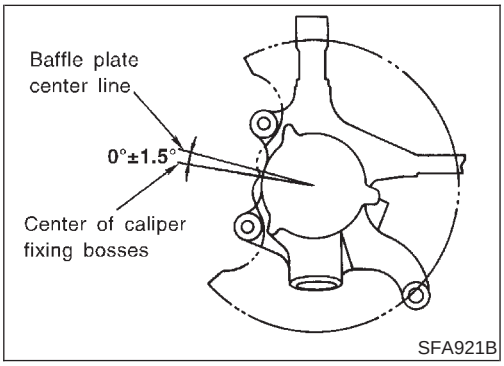

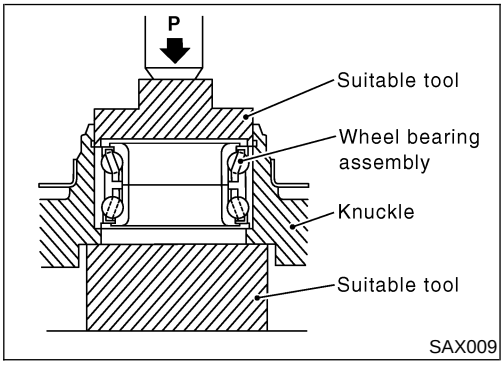

1. Install inner snap ring into groove of knuckle.
2. Press new wheel bearing assembly into knuckle until it contacts steering knuckle.

   Maximum load P:

   29 kN (3 ton, 3.3 US ton, 3.0 Imp ton)

CAUTION:

- **Do not press inner race of wheel bearing assembly.**
- **Do not apply oil or grease to mating surfaces of wheel bearing outer race and knuckle.**

3. Install outer snap ring into groove of knuckle.

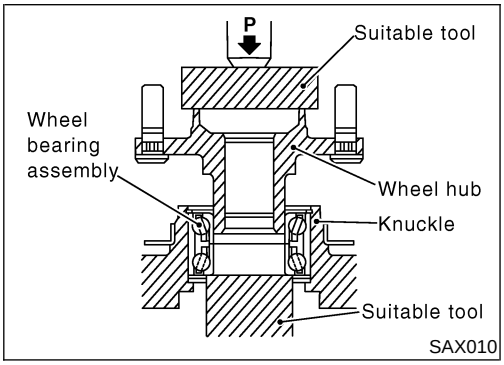

4. Press wheel hub into knuckle until it stops when the end of the wheel bearing is hit.

   Maximum load P:

   29 kN (3 ton, 3.3 US ton, 3.0 Imp ton)

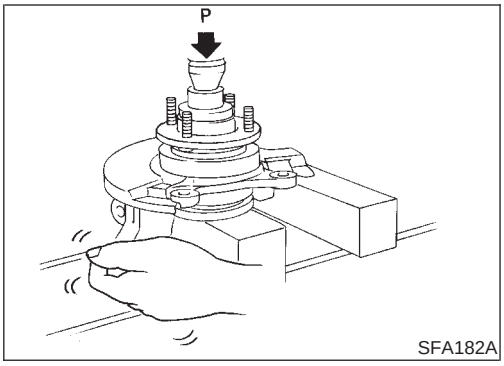

5. Check bearing operation.
a. Add load P with press.

   Load P:
   49.0 kN
   (5.0 ton, 5.5 US ton, 4.92 Imp ton)

b. Spin knuckle several turns in both directions.
c. Make sure that wheel bearings operate smoothly.

Drive Shaft

COMPONENTS

=NLAX0016

SEC. 391

Circular clip:
Circular clips should be properly meshed with differential side gear (transaxle side) and with joint assembly (wheel side). Make sure they will not come out.

Be careful not to damage boots. Use suitable protector or cloth during removal and installation.

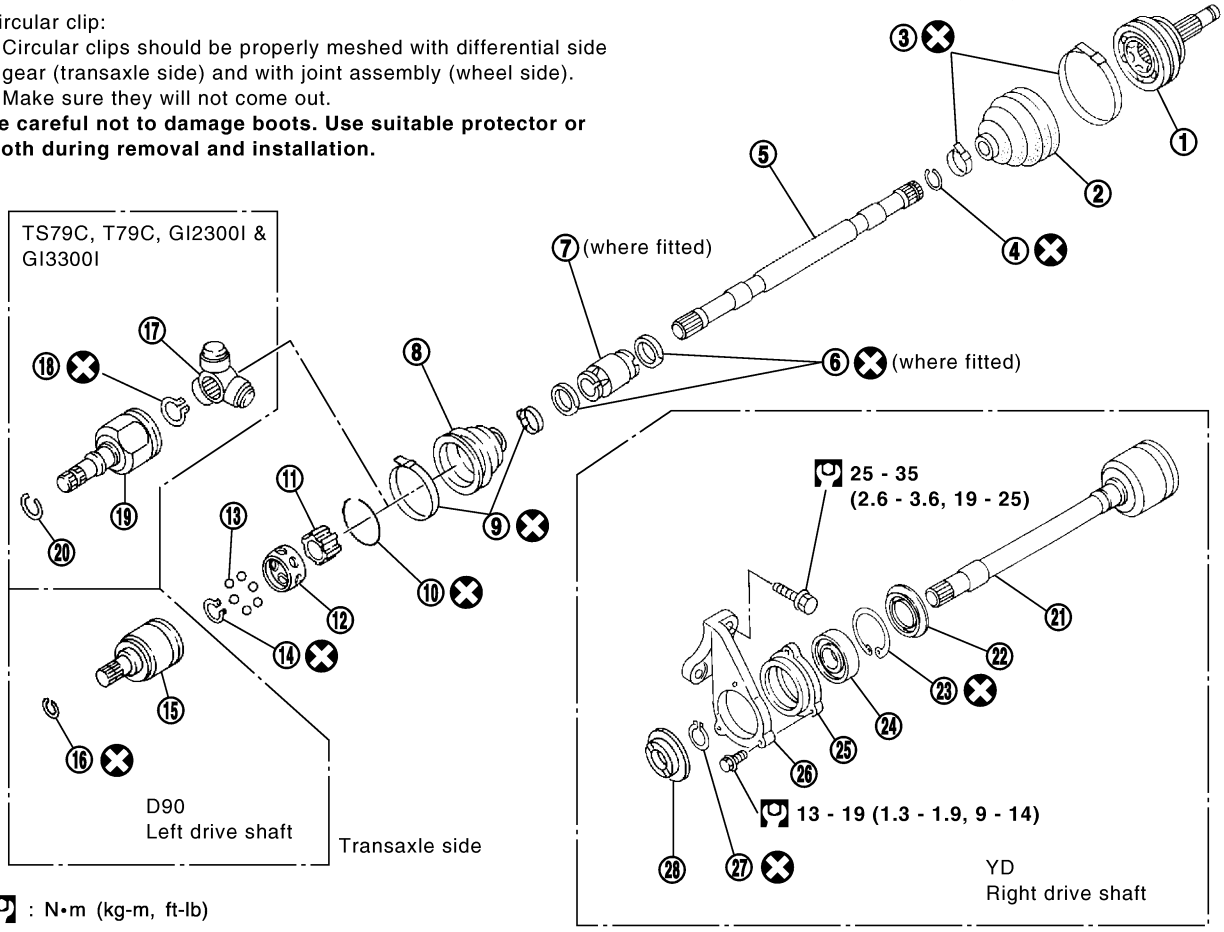

1. Joint assembly
2. Boot
3. Boot band
4. Circular clip
5. Drive shaft
6. Dynamic damper band (where fitted)
7. Dynamic damper (where fitted)
8. Boot
9. Boot band
10. Stopper ring
11. Inner race
12. Cage
13. Ball
14. Snap ring
15. Slide joint housing
16. Circular clip
17. Spider assembly
18. Snap ring
19. Slide joint housing
20. Circular clip
21. Slide joint housing with extension shaft
22. Dust shield
23. Snap ring
24. Support bearing
25. Support bearing retainer
26. Bracket
27. Snap ring
28. Dust shield

REMOVAL

NLAX0014

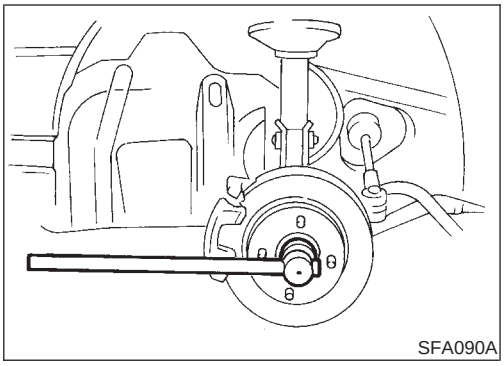
SFA090A

1. Remove wheel bearing lock nut.

Brake caliper need not be disconnected. Do not twist or stretch brake hose when moving components.

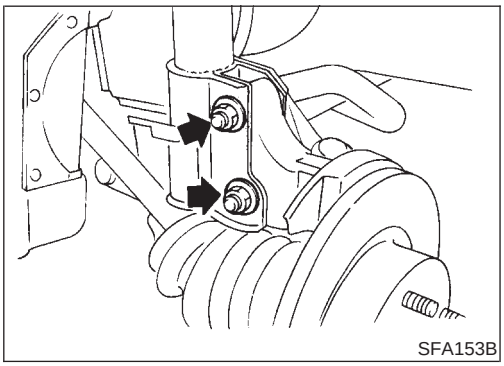
SFA153B

2. Remove strut lower mount bolts.
3. Remove brake hose clip.

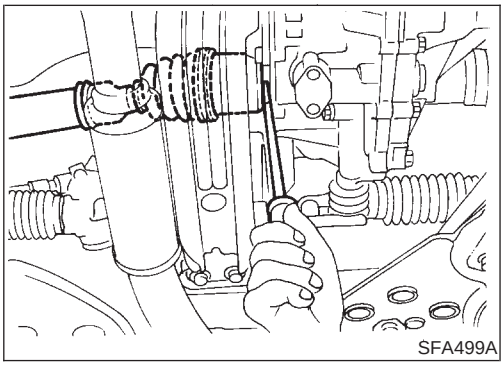
SFA499A

4. Separate drive shaft from knuckle by lightly tapping it. If it is hard to remove, use a puller.
   Cover boots with shop towel so as not to damage them when removing drive shaft.
   Refer to "Wheel Hub and Knuckle", "FRONT AXLE", AX-5.
5. Remove right drive shaft from transaxle.

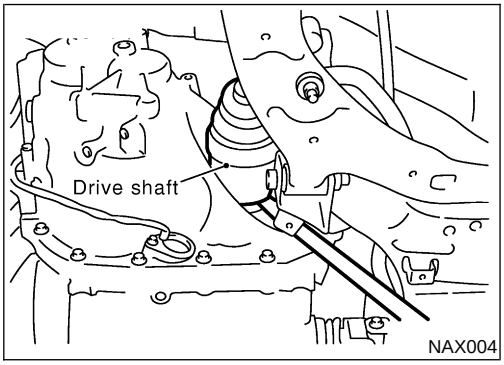

NAX004

6. Remove left drive shaft from transaxle.
- Pry off drive shaft from transaxle as shown at left.

INSTALLATION

NLAX0015

Transaxle Side

NLAX0015S01

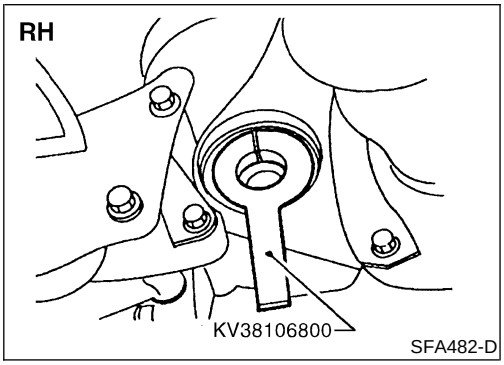

SFA482-D

1. Drive a new oil seal to transaxle. Refer to MT-16 (5MT), MT-11 (6MT) or AT-413.
2. Set Tool along the inner circumference of oil seal.

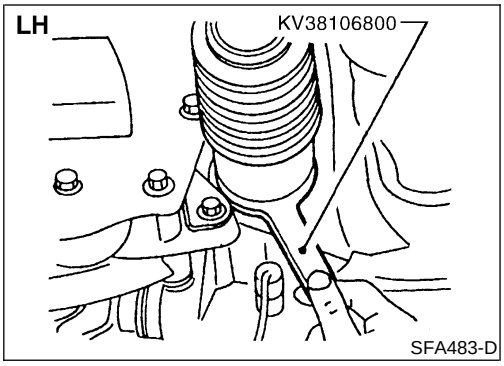

3. Insert drive shaft into transaxle. Be sure to properly align the serrations and then withdraw Tool.
4. Push the drive shaft until the circular clip on the drive shaft fits into the circular clip groove of the side gear.
5. After its insertion, try to pull the flange out of the slide joint by hand. If it pulls out, the circular clip is not properly meshed with the side gear.

Wheel Side

NLAX0015S02

- Install drive shaft into knuckle.
- Tighten upper knuckle nut and wheel bearing lock nut. Refer to section Installation in "Wheel Hub and Knuckle", "FRONT AXLE", AX-5.

DISASSEMBLY

NLAX0017

Transaxle Side (D90 — types)

NLAX0017S01

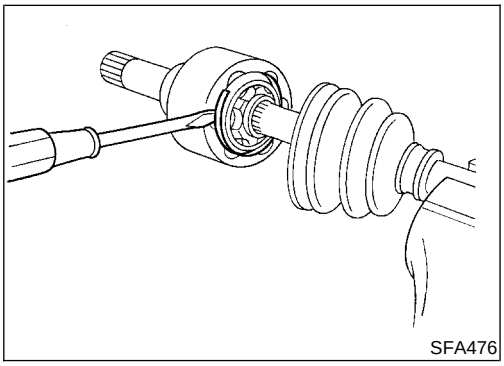

1. Remove boot bands.
2. Put matching marks on slide joint housing and inner race, before separating joint assembly.
3. Remove stopper ring with a screwdriver, and pull out slide joint housing.

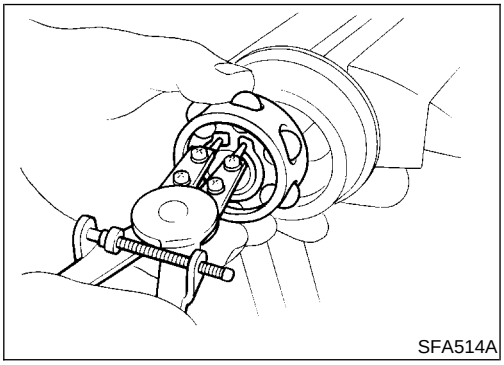

4. Put matching marks on inner race and drive shaft.
5. Remove snap ring, then remove ball cage, inner race and balls as a unit.
6. Draw out boot.

Cover drive shaft serrations with tape so as not to damage the boot.

Transaxle Side (TS79C, T79C, GI2300I & GI3300I)

NLAX0017S04

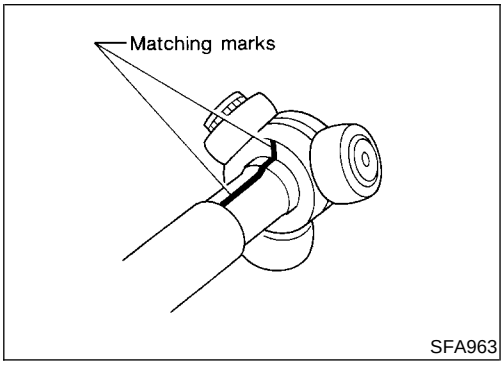

1. Remove boot bands.
2. Put matching marks on slide joint housing and drive shaft before separating joint assembly.
3. Put matching marks on spider assembly and drive shaft.

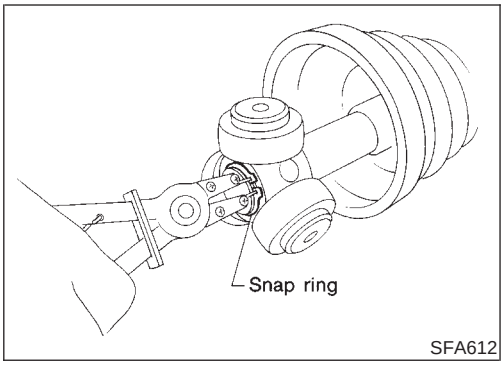

SFA612

4. Pry off snap ring, then remove spider assembly.

CAUTION:

Do not disassemble spider assembly.

5. Draw out boot.

Cover drive shaft serration with tape to prevent damage to the boot.

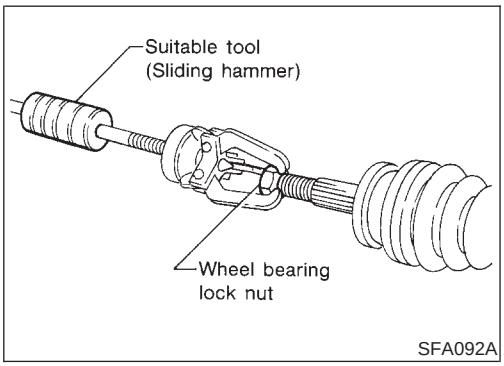

SFA092A

Wheel Side (ZF90, B90, AC2300I & AC3300I)

NLAX0017S02

1. Before separating joint assembly, put matching marks on drive shaft and joint assembly.
2. Separate joint assembly with a suitable tool.

Be careful not to damage threads on drive shaft.

3. Remove boot bands.
4. Draw out boot.

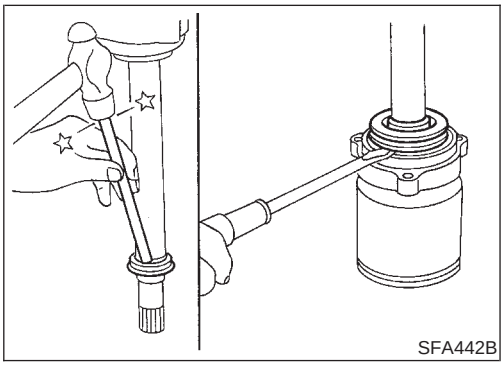
SFA442B

Support Bearing

NLAX0017S03

1. Remove dust shield.

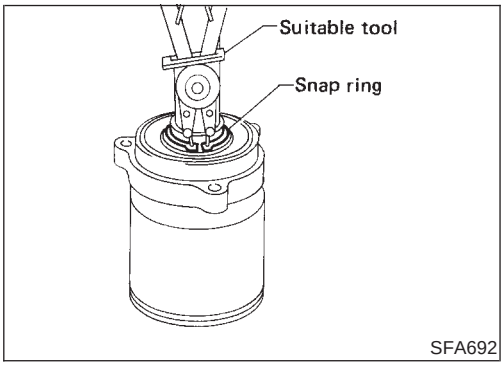

SFA692

2. Remove snap ring.

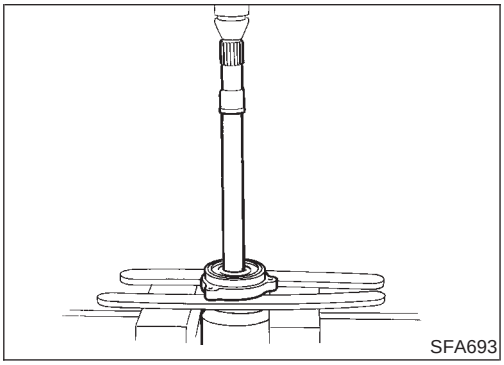
SFA693

3. Press support bearing assembly off of drive shaft.

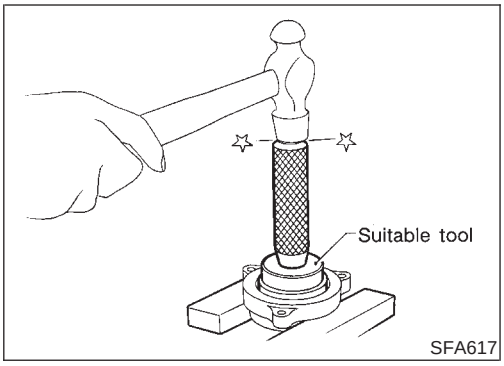

4. Separate support bearing from retainer.

INSPECTION

NLAX0018

Thoroughly clean all parts in cleaning solvent, and dry with compressed air. Check parts for evidence of deformation or other damage.

Drive Shaft

NLAX0018S01

Replace drive shaft if it is twisted or cracked.

Boot

NLAX0018S02

Check boot for fatigue, cracks or wear. Replace boot with new boot bands.

Joint Assembly (Transaxle side)

NLAX0018S03

- Check spider assembly for needle bearing and washer damage. Replace if necessary. (Tripod type)
- Check roller surfaces for scratches, wear or other damage. Replace if necessary. (Tripod type)
- Replace any parts of double offset joint which show signs of scorching, rust, wear or excessive play. (Double offset type)
- Check serration for deformation. Replace if necessary.
- Check slide joint housing for any damage. Replace if necessary.

Joint Assembly (Wheel side)

NLAX0018S04

Replace joint assembly if it is deformed or damaged.

Support Bearing

NLAX0018S05

Make sure wheel bearing rolls freely and is free from noise, cracks, pitting or wear.

Support Bearing Bracket

NLAX0018S06

Check support bearing bracket for cracks with a magnetic exploration or dyeing test.

ASSEMBLY

NLAX0019

- **After drive shaft has been assembled, ensure that it moves smoothly over its entire range without binding.**
- **Use grease according to AX-19, SDS.**

Wheel Side (ZF90, B90, AC2300I & AC3300I)

NLAX0019S01

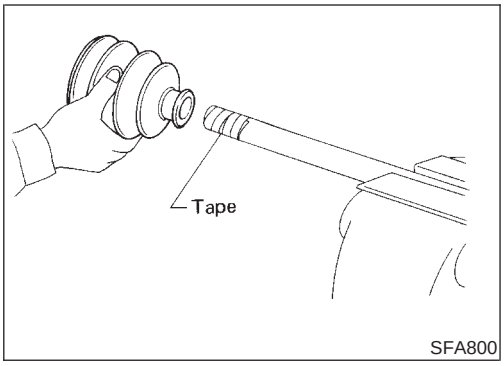

SFA800

1. Install boot and new small boot band on drive shaft.

Cover drive shaft serration with tape so as not to damage boot during installation.

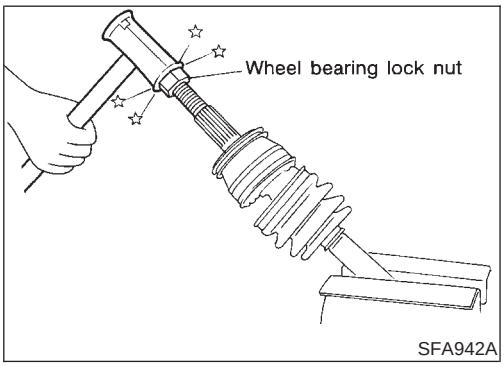

SFA942A

2. Set joint assembly onto drive shaft by lightly tapping it.
   Install joint assembly securely, ensuring marks which were made during disassembly are properly aligned.

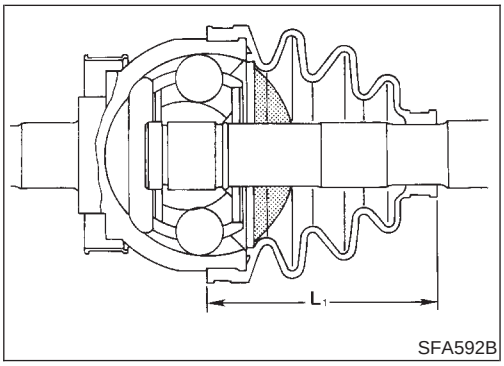

SFA592B

3. Pack drive shaft with specified amount of grease.
   Specified amount of grease:
   Refer to AX-19, SDS.
4. Make sure that boot is properly installed on the drive shaft groove.
   Set boot so that it does not swell and deform when its length is "L_1".
   Length "L_1":
   Refer to AX-19, SDS.

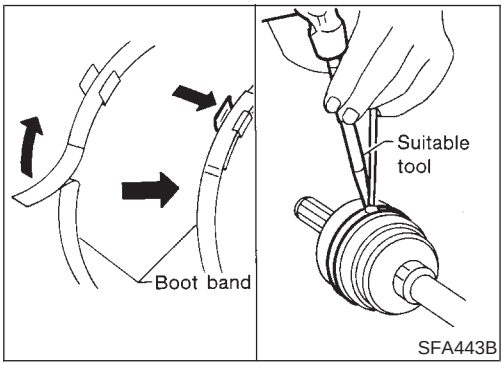

SFA443B

5. Lock new larger and smaller boot bands.

- Boot bands type A

a) Lock new larger and smaller boot bands securely with a suitable tool.

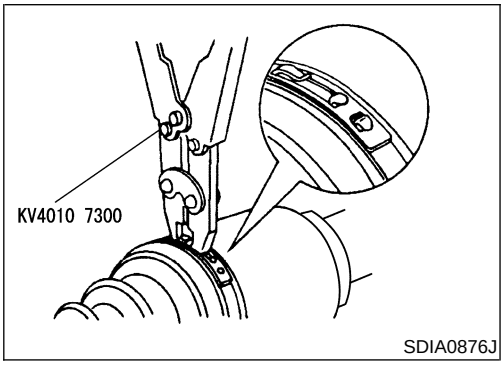

SDIA0876J

- Boot bands type B

a) As shown in the figure, secure the big and small ends of the boot with new boot bands.

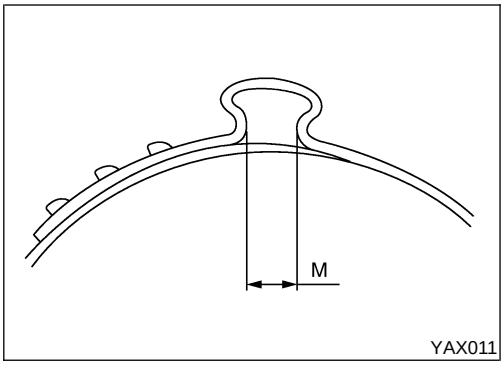

YAX011

b) Rotate joint part and confirm that mounting position of boot does not deviate. When it deviates, mount a new boot band again.

CAUTION:

When fixing boot band, fix so that the diameter "M" on the figure becomes as follows.

Diameter "M": 5 mm (0.20 in)

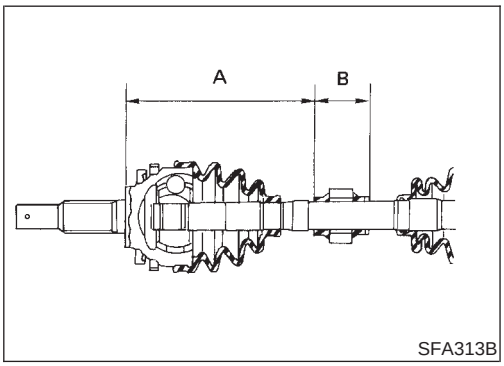

SFA313B

Dynamic Damper (where fitted)

NLAX0019S02

1. Use new damper bands when installing.
2. Install dynamic damper from stationary-joint side while holding it securely.

Length:

Refer to AX-20, SDS.

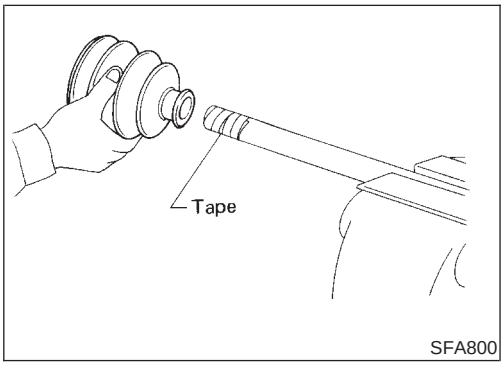

SFA800

Transaxle Side (D90)

NLAX0019S03

1. Install boot and new small boot band on drive shaft.

Cover drive shaft serration with tape so as not to damage boot during installation.

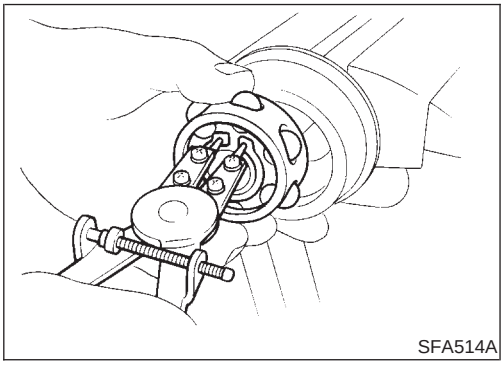
SFA514A

2. Install ball cage, inner race and balls or spider assembly as a unit, making sure the marks which were made during disassembly are properly aligned.
3. Install new snap ring.

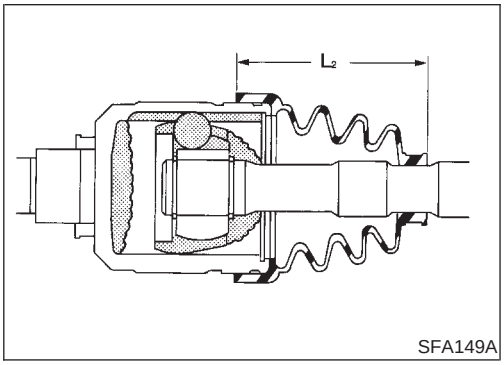

SFA149A

4. Pack drive shaft with specified amount of grease.

Specified amount of grease:

Refer to AX-19, SDS.

5. Install slide joint housing, then install new snap ring.
6. Make sure that boot is properly installed on the drive shaft groove.
   Set boot so that it does not swell and deform when its length is "L_2".

Length "L_2":

Refer to AX-19, SDS.

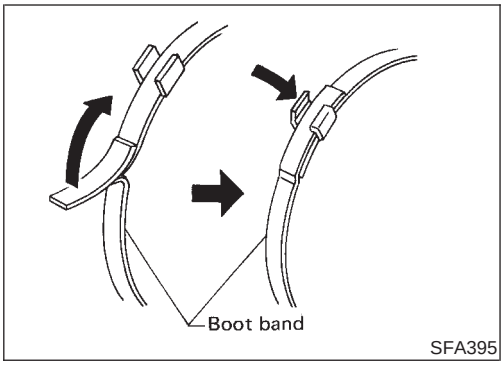

SFA395

7. Lock new larger and smaller boot bands securely with a suitable tool.

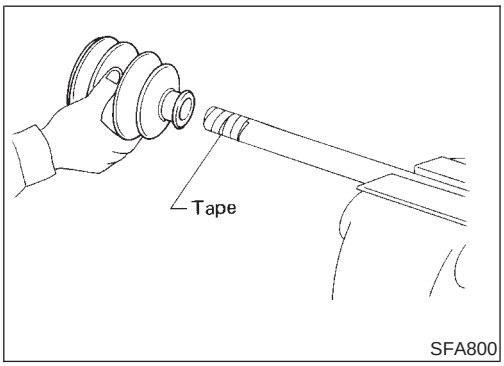

SFA800

Transaxle Side (TS79C, T79C, GI2300I & GI3300I)

NLAX0019S05

1. Install boot and new small boot band on drive shaft.

Cover drive shaft serration with tape so as not to damage boot during installation.

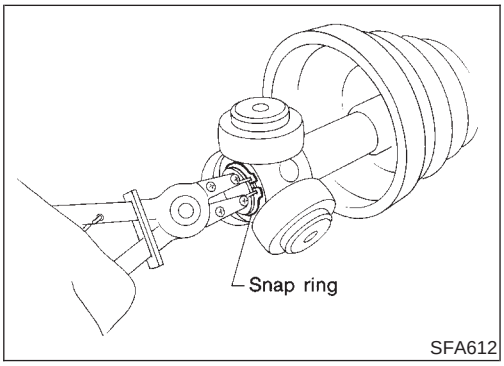

SFA612

2. Install spider assembly securely, making sure the marks which were made during disassembly are properly aligned.
3. Install new snap ring.

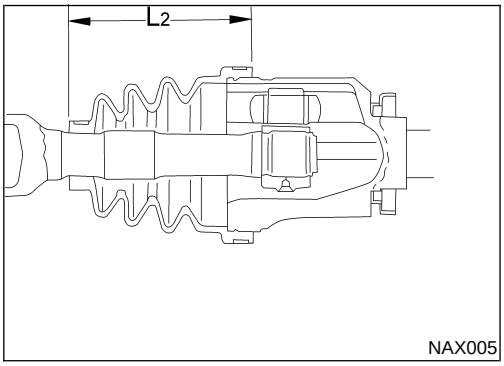

NAX005

4. Pack drive shaft with specified amount of grease.

   Specified amount of grease:

   Refer to AX-19, SDS.
5. Install slide joint housing.
6. Set boot so that it does not swell and deform when its length is "L_2":

   Refer to AX-19, SDS.

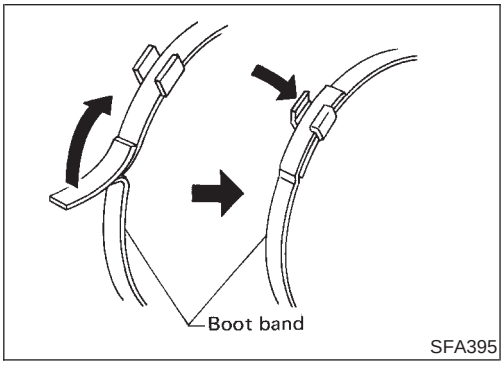

SFA395

Make sure that the boot is properly installed on the drive shaft groove.

7. Lock new larger and smaller boot bands.

- Boot bands type A

a) Lock new larger and smaller boot bands securely with a suitable tool.

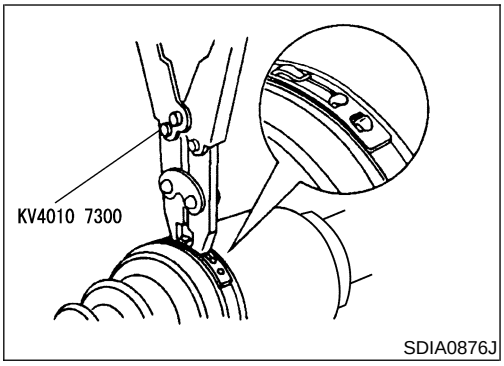

- Boot bands type B

a) As shown in the figure, secure the big and small ends of the boot with new boot bands.

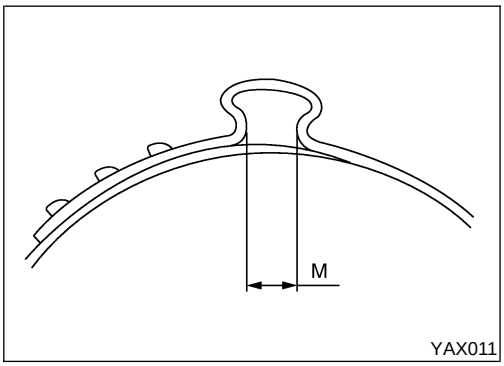

b) Rotate joint part and confirm that mounting position of boot does not deviate. When it deviates, mount a new boot band again.

CAUTION:

When fixing boot band, fix so that the diameter "M" on the figure becomes as follows.

Diameter "M": 5 mm (0.20 in)

Support Bearing

NLAX0019S04

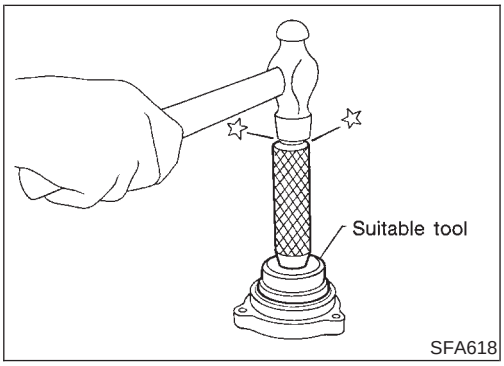

- Press bearing into retainer.

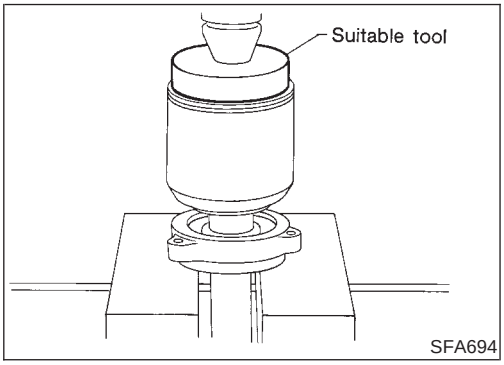

- Press drive shaft into bearing.

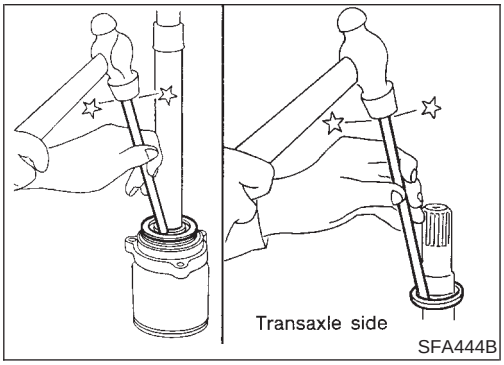

- Install snap ring.
- Install new dust shield.

Service Data and Specifications (SDS)

DRIVE SHAFT

=NLAX0020

		QG			YD	
		M/T models	A/T models		5 M/T models	6 M/T models
			LH	RH		
Joint type	Transaxle side	GI2300I	T79C	TS79C	D90	GI3300I
Grease	Quality	39709-BM500	39709-2U600		39709-BM500	*2
Joint type	Wheel side	AC2300I	ZF90		B90	AC3300I
Grease	Quality	Nissan genuine grease or equivalent	39209-2U600		Nissan genuine grease or equivalent	*3
Grease Capacity g (oz)	Transaxle side	125.5 - 135.5 (4.42 - 4.77)	155 - 165 (5.47 - 5.82)		145 - 165 (5.11 - 5.82)	167 - 177 (5.89 - 6.24)
	Wheel side	40 - 50 (1.41 - 1.76)	115 - 125 (4.06 - 4.41)	93 - 103 (3.28 - 3.63)	120 - 140 (4.41 - 4.94)	110 - 130 (3.88 - 4.59)*4
Boot length mm (in)	Transaxle side “L_2”	98 - 100 (3.86 - 3.94)*1	101.5 - 103.5 (4.00 - 4.07)*1		98 (3.86)*1	*1
	Wheel side “L_1”	94 - 96 (3.70 - 3.78)*1	94.1 - 96.1 (3.705 - 3.783)*1		110 (4.33)	*1

Transaxle side

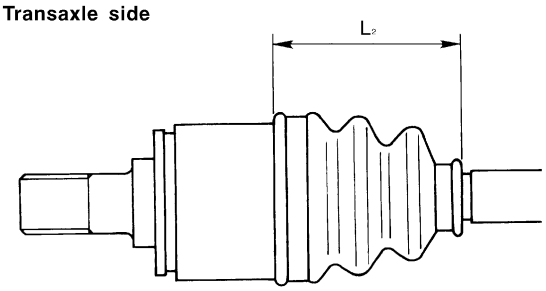

SFA961AA

Wheel side

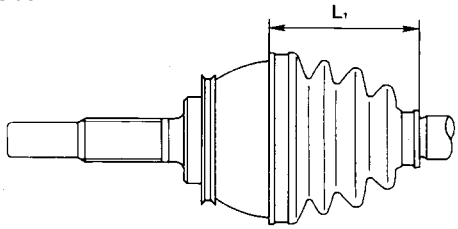

SFA962A

*1: Fit boot to boot groove in bar shaft

*2: GKN-ONE LUBER C grease or Nissan genuine grease or equivalent

*3: GKN HTBJ grease or Nissan genuine grease or equivalent

*4: Preload the grease 45 to 55 g (1.59 to 1.94 oz) before assembling boot and shaft. After assembling boot and shaft, inject the grease 65 to 75 g (2.29 to 2.65 oz).

DYNAMIC DAMPER (WHERE FITTED)

=NLAX0033

Unit: mm (in)

		QG				YD	
		M/T models		A/T models			
		LH	RH	LH	RH	LH	RH
Distance	"A"	178 - 184 (7.01 - 7.24)	375 - 381 (14.76 - 15.00)	—	398 (15.67)	172 - 178 (6.77 - 7.01)	190 -196 (7.48 - 7.72)
	"B"	64 (2.52)		—	70 (2.76)	70 (2.76)	70 (2.76)

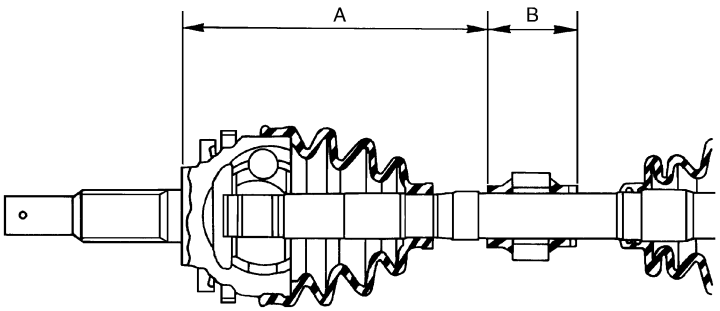

SAX015

WHEEL BEARING (FRONT)

NLAX0021

Wheel bearing axial end play limit mm (in)	0.05 (0.0020)
Wheel bearing lock nut tightening torque N·m (kg-m, ft-lb)	255 - 333 (26 - 34, 188 - 245)

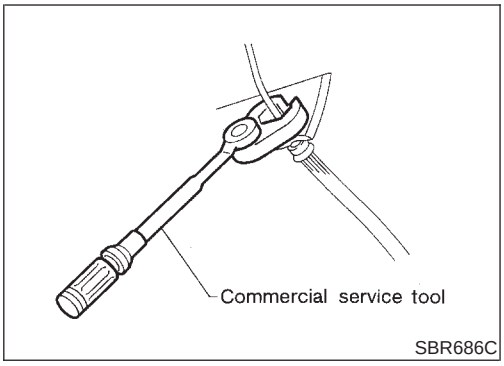

Precautions

PRECAUTIONS

NLAX0022

- **When installing each rubber part, final tightening must be carried out under unladen condition* with tires on ground. *: Fuel, radiator coolant and engine oil full. Spare tire, jack, hand tools and mats in designated positions.**
- **Use flare nut wrench when removing or installing brake tubes.**
- **After installing removed suspension parts, check wheel alignment.**
- **Do not jack up at the trailing arm and lateral link.**
- **Always torque brake lines when installing.**

Preparation

SPECIAL SERVICE TOOLS

NLAX0032

Tool number Tool name	Description	
KV40104710 Drift	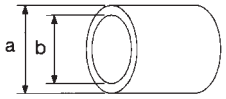 NT474	Install ABS sensor rotor **a: 76.3 mm (3.004 in) dia.** **b: 67.9 mm (2.673 in) dia.**
ST3072000 Drift	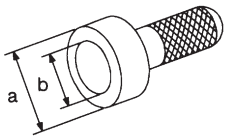 NT115	Install ABS sensor rotor **a: 77 mm (3.03 in) dia.** **b: 55.5 mm (2.185 in) dia.**

COMMERCIAL SERVICE TOOLS

NLAX0024

Tool name	Description	
1 Flare nut crowfoot 2 Torque wrench	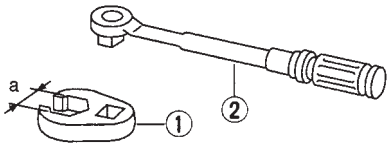 NT360	Removing and installing brake piping **a: 10 mm (0.39 in)**

Noise, Vibration and Harshness (NVH) Troubleshooting

NLAX0025

Refer to “Noise, Vibration and Harshness (NVH) Troubleshooting”, “FRONT AXLE”, AX-3.

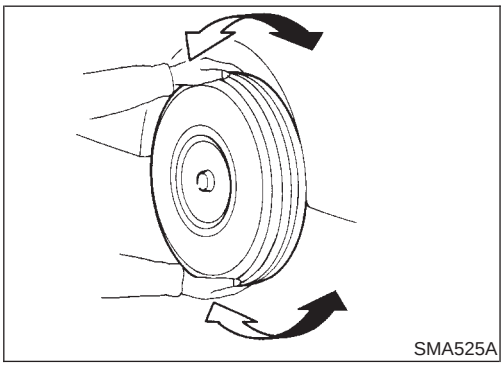

On-vehicle Service

REAR AXLE PARTS

NLAX0026

Check axle and suspension parts for excessive play, wear or damage.

- Shake each rear wheel to check for excessive play.

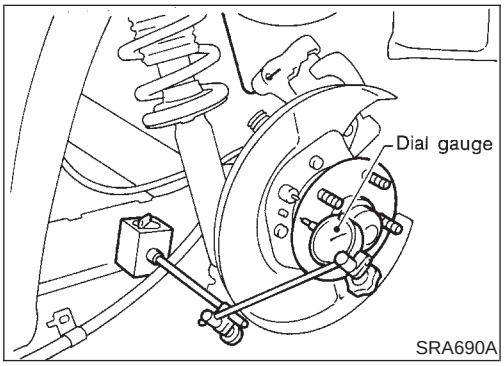

REAR WHEEL BEARING

NLAX0027

- Check axial end play.

  Axial end play:

  0.05 mm (0.0020 in)
- Check that wheel hub bearings operate smoothly.
- Check tightening torque of wheel bearing lock nut.

  : 187 - 254 N·m (19 - 26 kg-m, 138 - 188 ft-lb)
- Replace wheel bearing assembly if there is axial end play or wheel bearing does not turn smoothly. Refer to “Wheel Hub”, “REAR AXLE”, AX-23.

Wheel Hub

COMPONENTS

NLAX0028

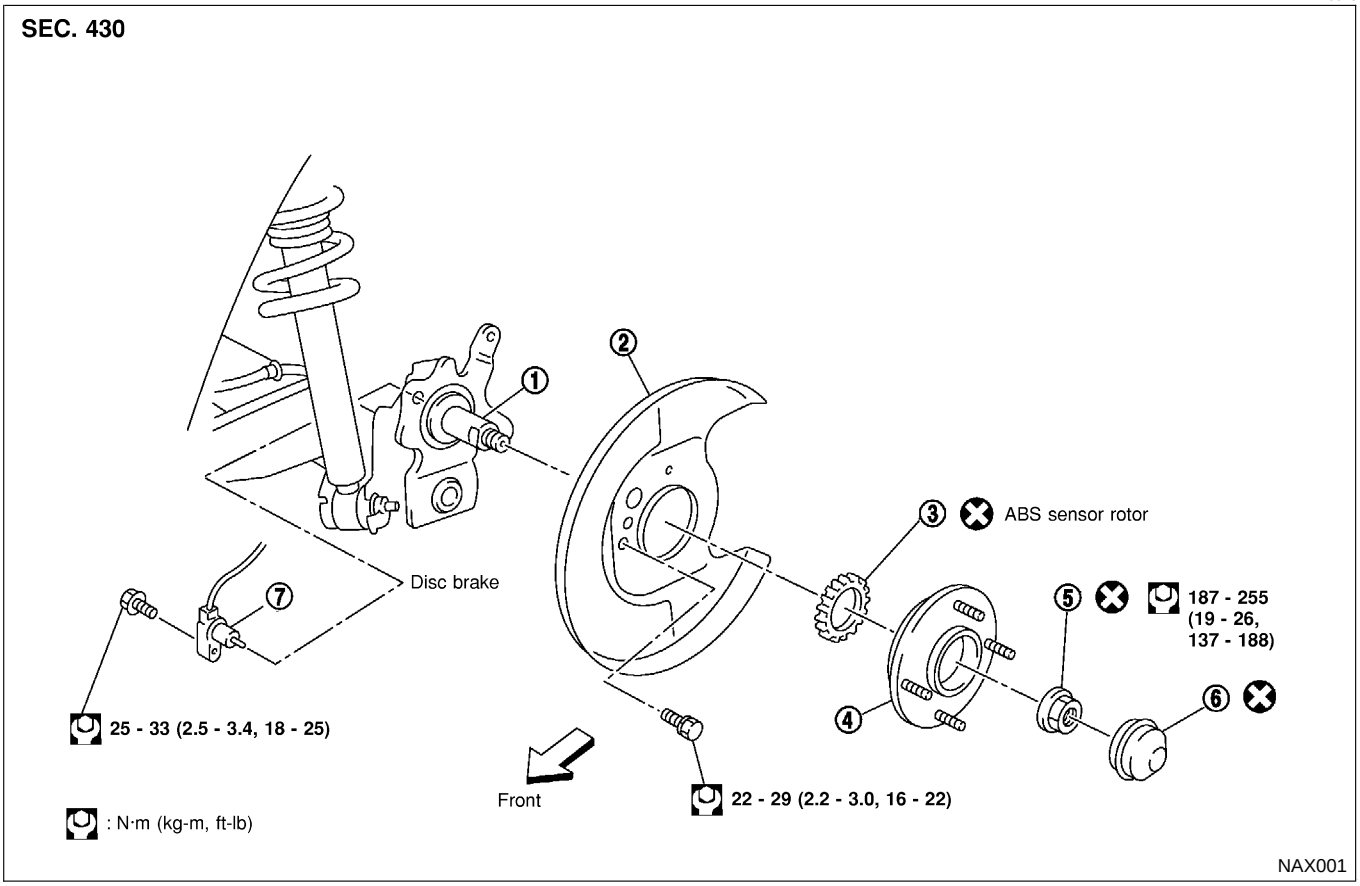

1. Spindle
2. Baffle plate
3. ABS sensor rotor
4. Wheel hub bearing
5. Wheel bearing lock nut
6. Hub cap
7. ABS sensor

REMOVAL

NLAX0029

CAUTION:

- **Before removing the rear wheel hub assembly, disconnect the ABS wheel sensor from the assembly. Then move it away from the hub assembly. Failure to do so may result in damage to the sensor wires and the sensor becoming inoperative.**
- **Wheel hub bearing does not require maintenance. If any of the following symptoms are noted, replace wheel hub bearing assembly.**

1) Growling noise is emitted from wheel hub bearing during operation.

2) Wheel hub bearing drags or turns roughly. This occurs when turning hub by hand after bearing lock nut is tightened to specified torque.

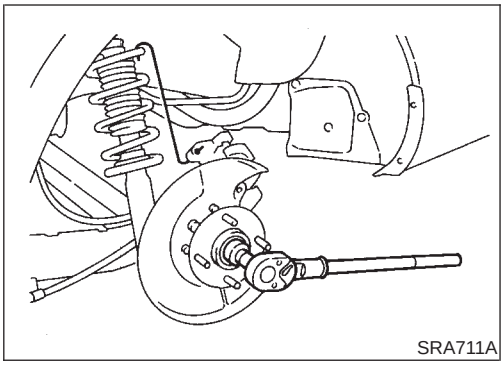

1. Remove brake caliper assembly.
2. Remove wheel bearing lock nut.
3. Remove brake rotor (models with disk brake) or brake drum (models with drum brakes).
4. Remove wheel hub bearing from spindle.

CAUTION:

Do not disconnect brake hose from caliper.

- **Suspend caliper assembly with wire so as not to stretch brake hose.**
- **Be careful not to depress brake pedal, or piston will pop out.**
  Make sure brake hose is not twisted.

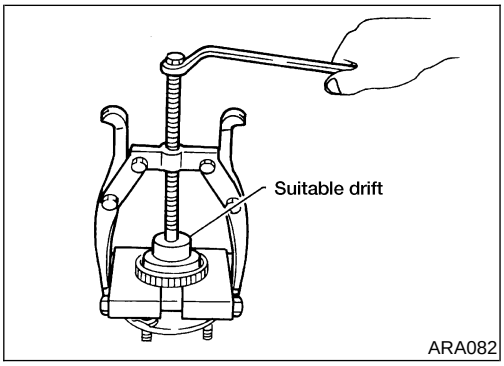

5. Remove the sensor rotor using suitable puller, drift and bea ring replacer.

INSTALLATION

NLAX0030

- With vehicles equipped with ABS, press-fit ABS sensor rotor into wheel hub bearing using a drift.
  Do not reuse ABS sensor rotor. When installing, replace it with a new one.

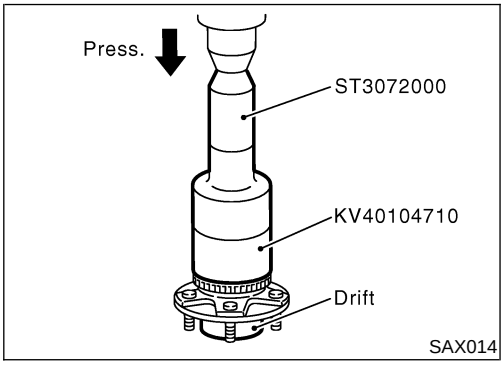

- Press-fit ABS sensor rotor as far as the location shown in figure at left.

  Height "h":

  12.5 - 13.5 mm (0.492 - 0.531 in)

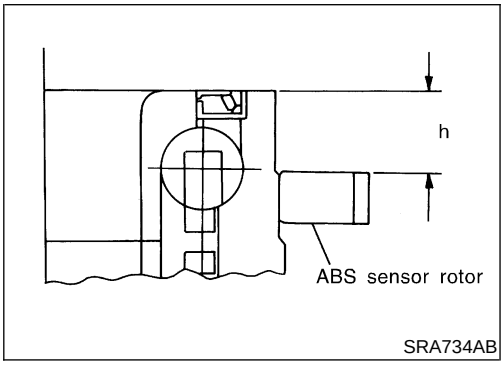

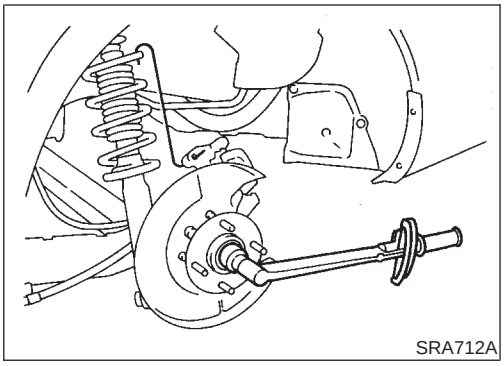
SRA712A

- Install wheel hub bearing.
- Tighten wheel bearing lock nut.
  Before tightening, apply oil to threaded portion of rear spindle.
  Do not reuse wheel bearing lock nut.
  : 187 - 254 N·m (19 - 26 kg-m, 138 - 188 ft-lb)
- Check that wheel bearings operate smoothly.

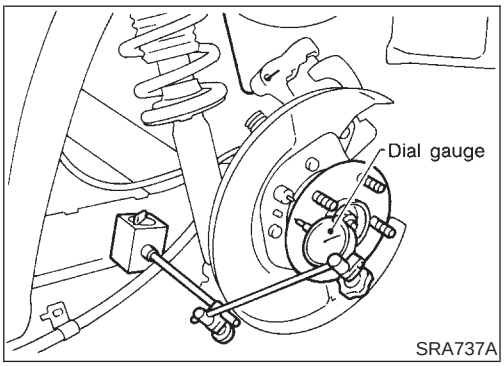

SRA737A

- Check wheel hub bearing axial end play.
  Axial end play:
  0.05 mm (0.0020 in)

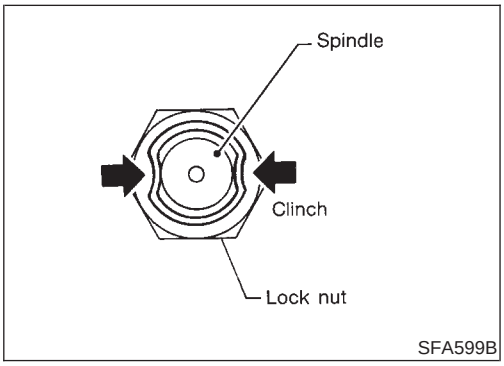

SFA599B

- Clinch two places of lock nut.

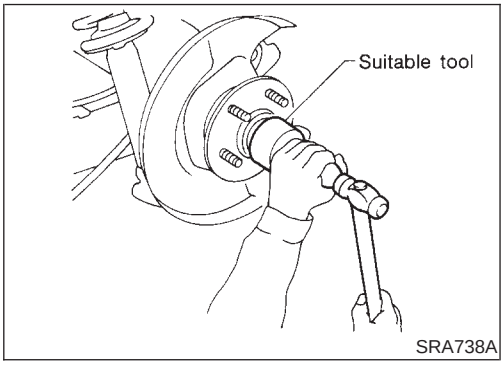

SRA738A

- Install hub cap using a suitable tool.
  Do not reuse hub cap. When installing, replace it with a new one.

Service Data and Specifications (SDS)

WHEEL BEARING (REAR)

=NLAX0031

Wheel bearing axial end play mm (in)	0.05 (0.0020)
Wheel bearing lock nut tightening torque N·m (kg-m, ft-lb)	187 - 254 (19 - 26, 138 - 188)